Band Offsets in UV Light Emitting Devices Based On III-V Nitride Heterostructures

J.F. Schetzina
North Carolina State University

Development of III-V Nitride UV Light Emitters

Key Issues -- 1994

- Improved p-Type Subtitutional Doping
- Dislocation Reduction
- Strain Limits
- Suitable Laser/LED Structures -- Band Offsets
- Preparation of Cavities & End Mirrors (Lasers)
- Device Processing
- Ohmic Contacts

Wide Bandgap Semiconductors

Band Line Ups

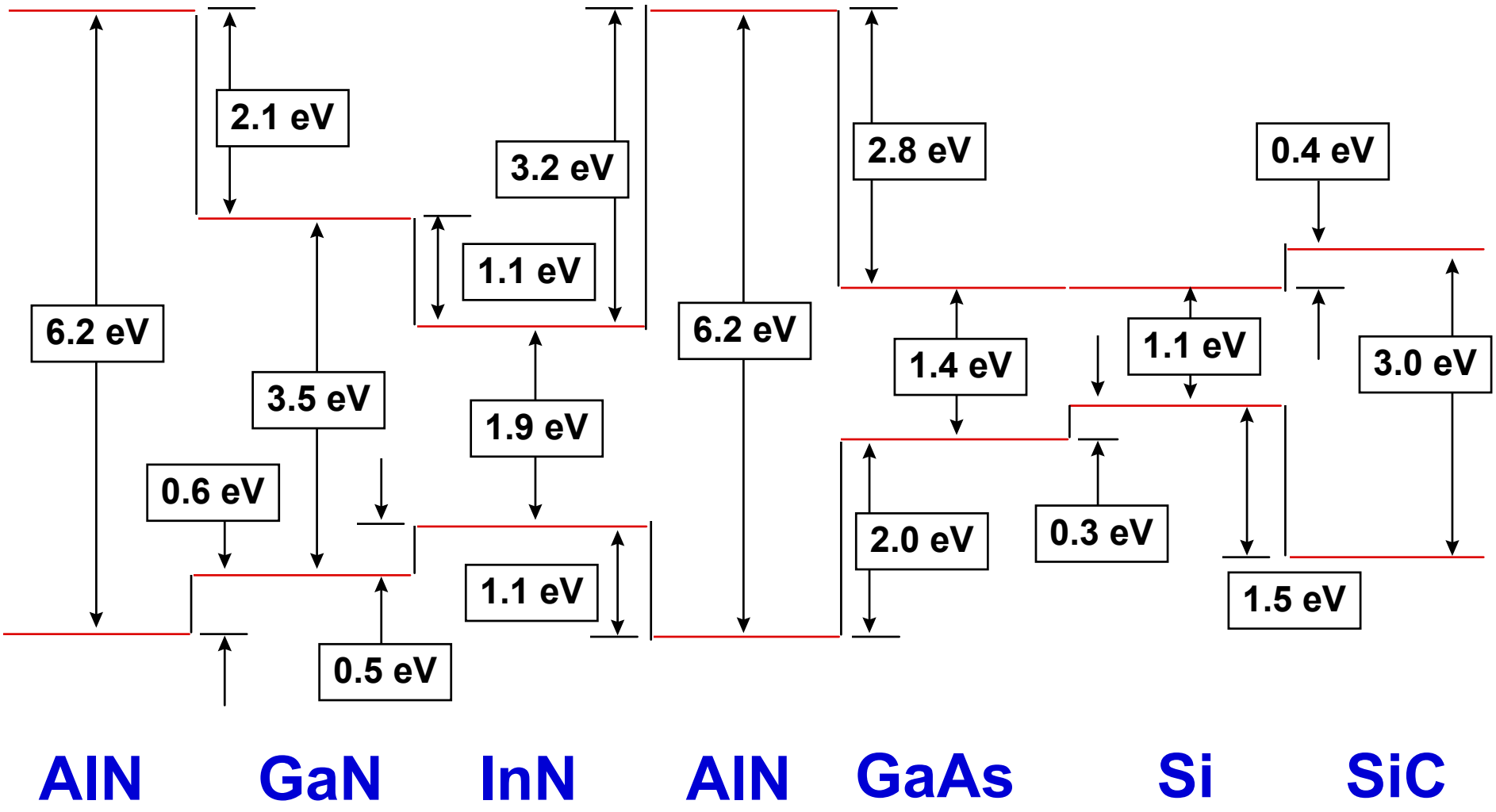

III-V Nirride Semiconductors

Band Line Ups

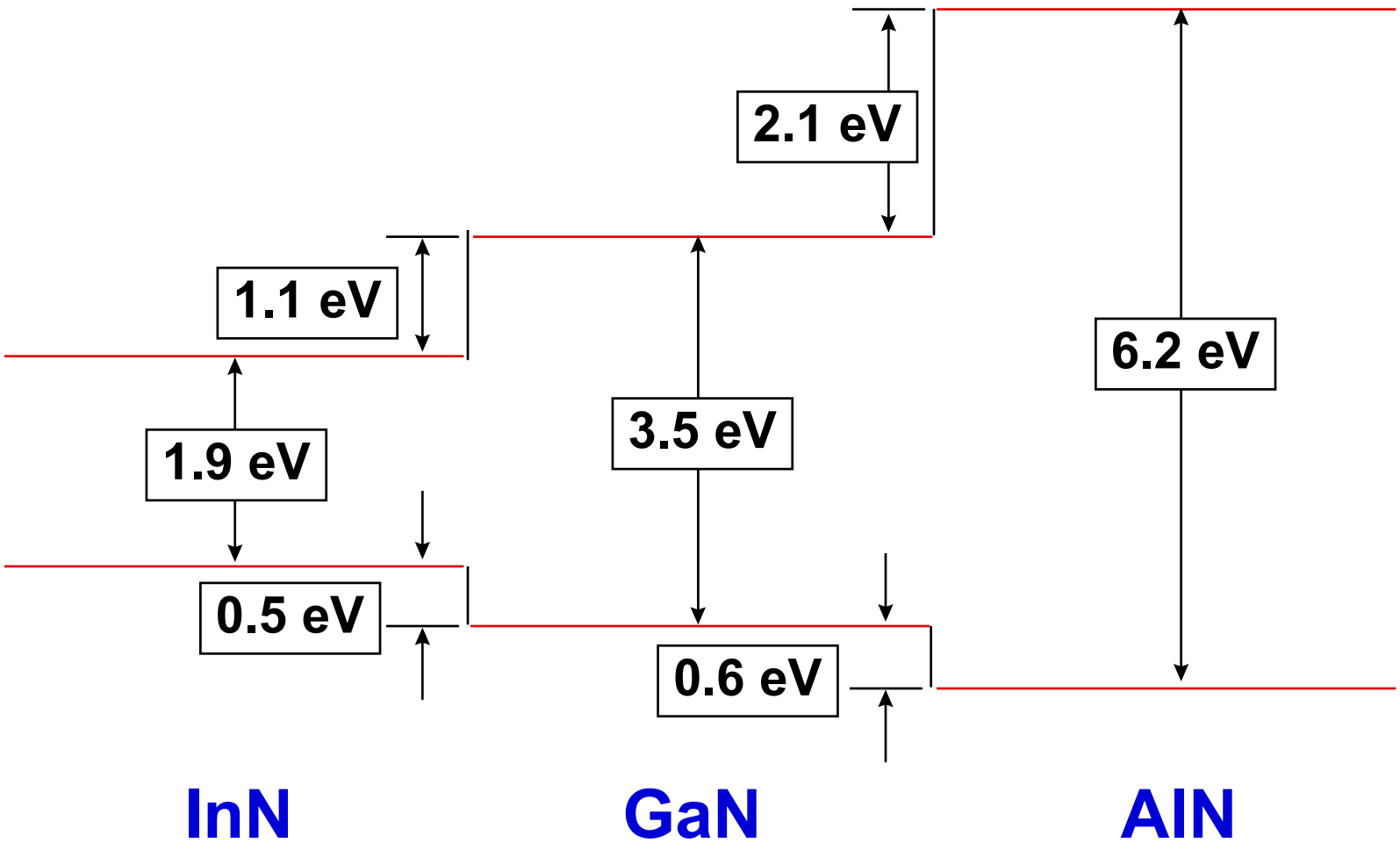

GaN/AlGaN p-i-n Photodiode Structure

Prepared by MOVPE

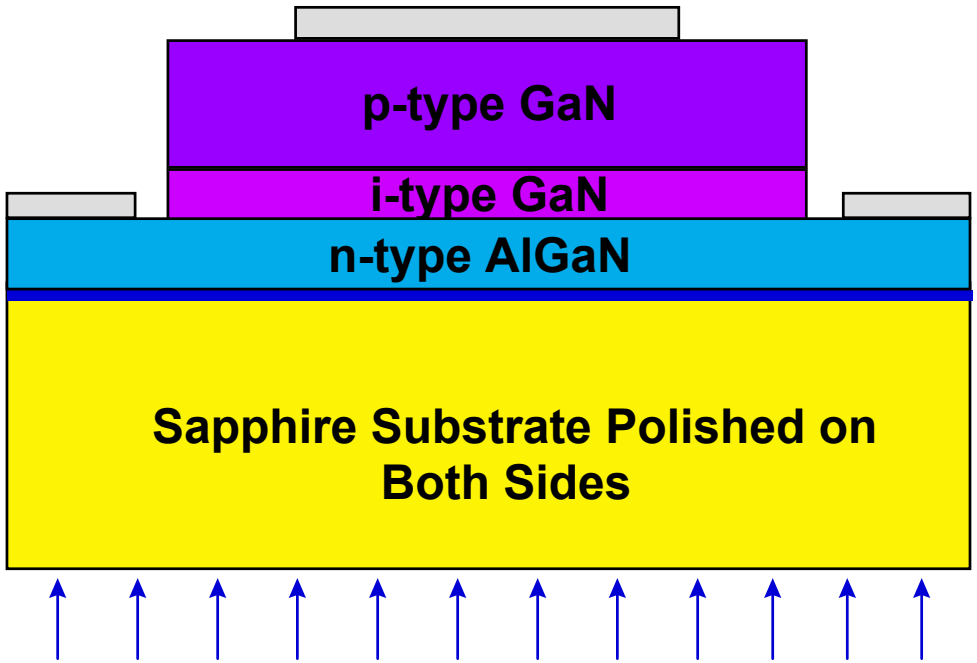

Designed for Through-the-Substrate Illumination

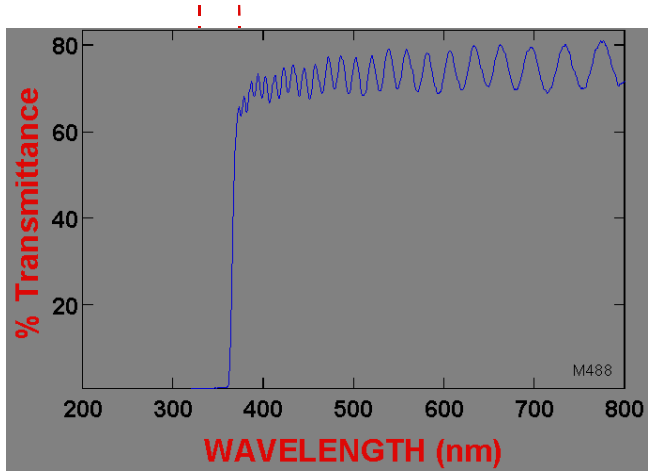

Diode Responsivity Wavelength Band (319 - 365 nm)

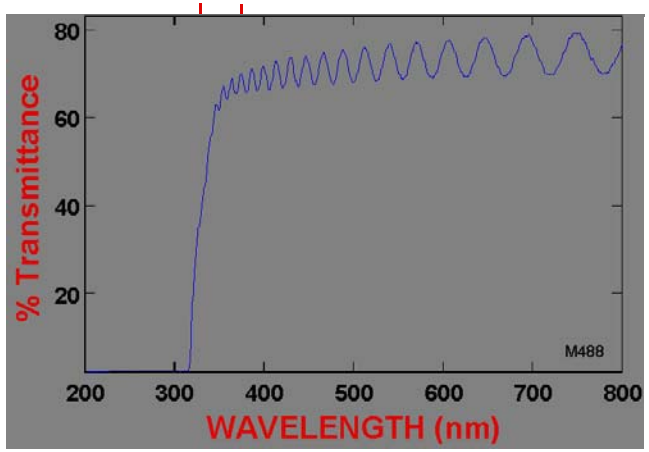

GaN/AlGaN Photodiode Structure

Photogenerated Carrier Flow Under Illumination

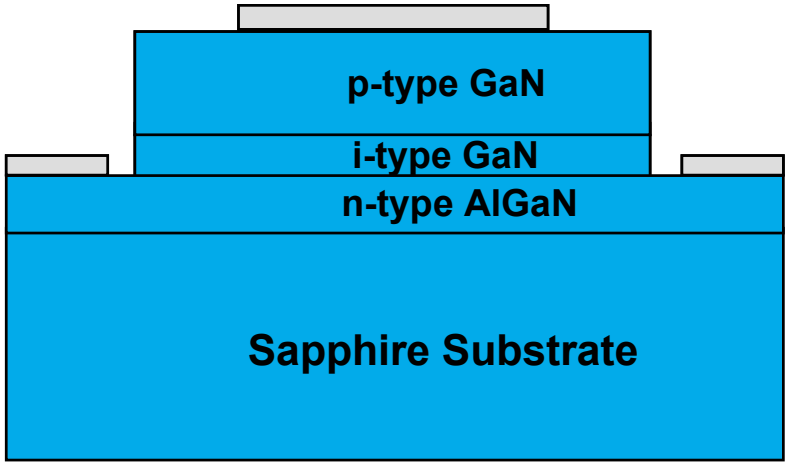

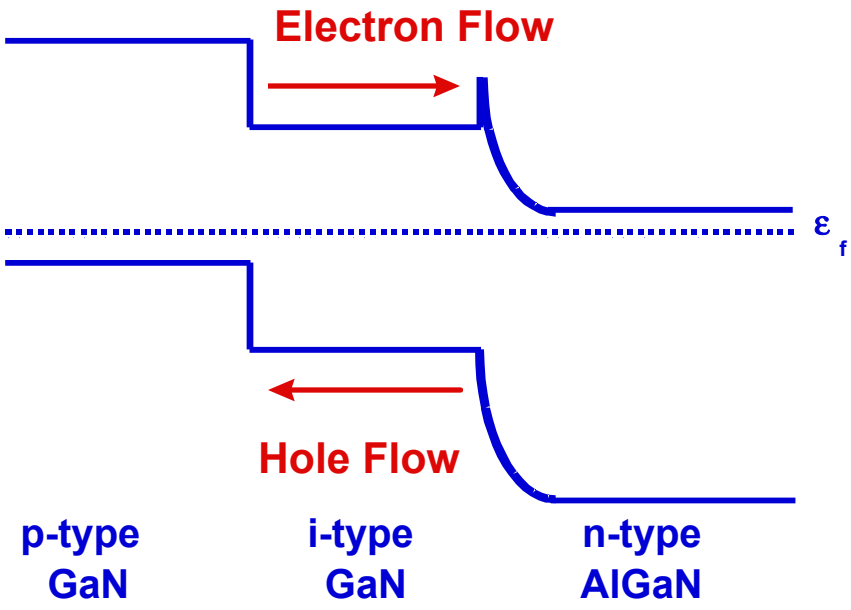

- GaN/AlGaN Heterojunction Band Offset Produces Internal Barrier Which Impedes Electron Flow

GaN/AlGaN Photodiode Structure

Photogenerated Carrier Flow Under Illumination

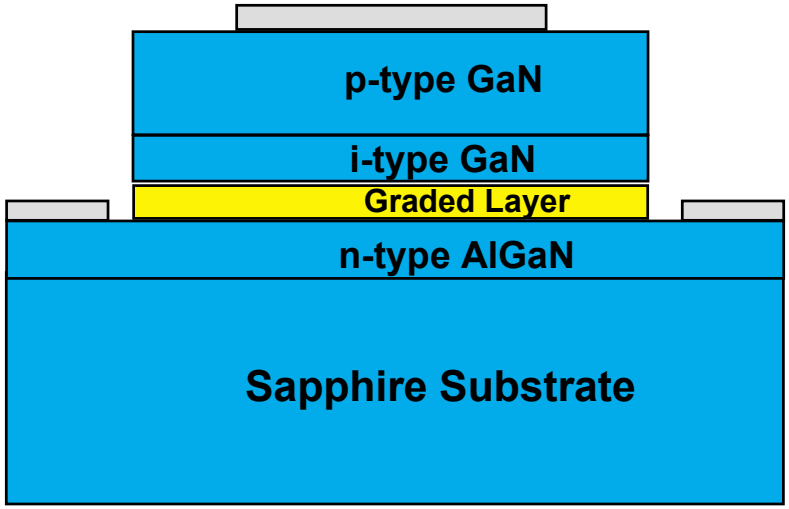

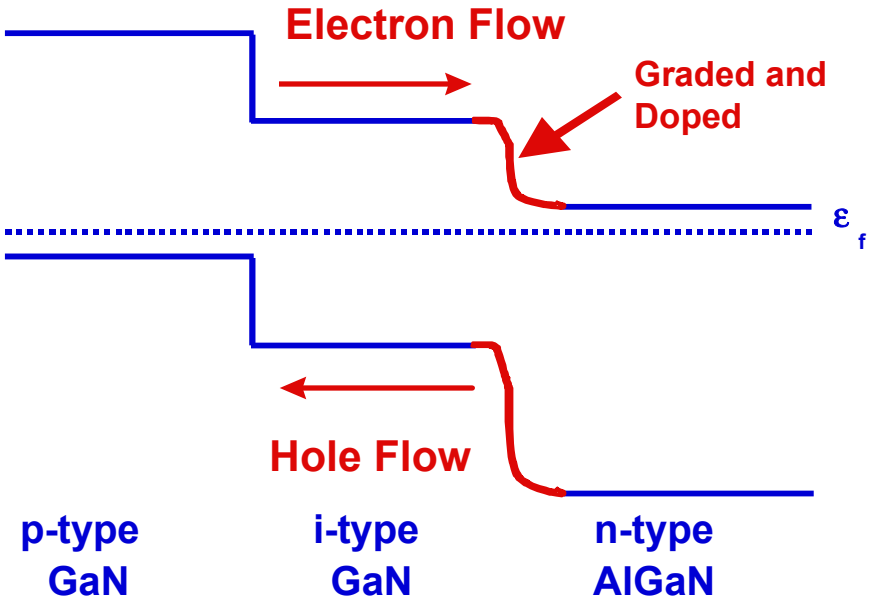

- No Internal Barriers to the Flow of Photogenerated Carriers
- No Ohmic Contact Issues

Heterojunction Band Offsets

Effect of n-type Doping

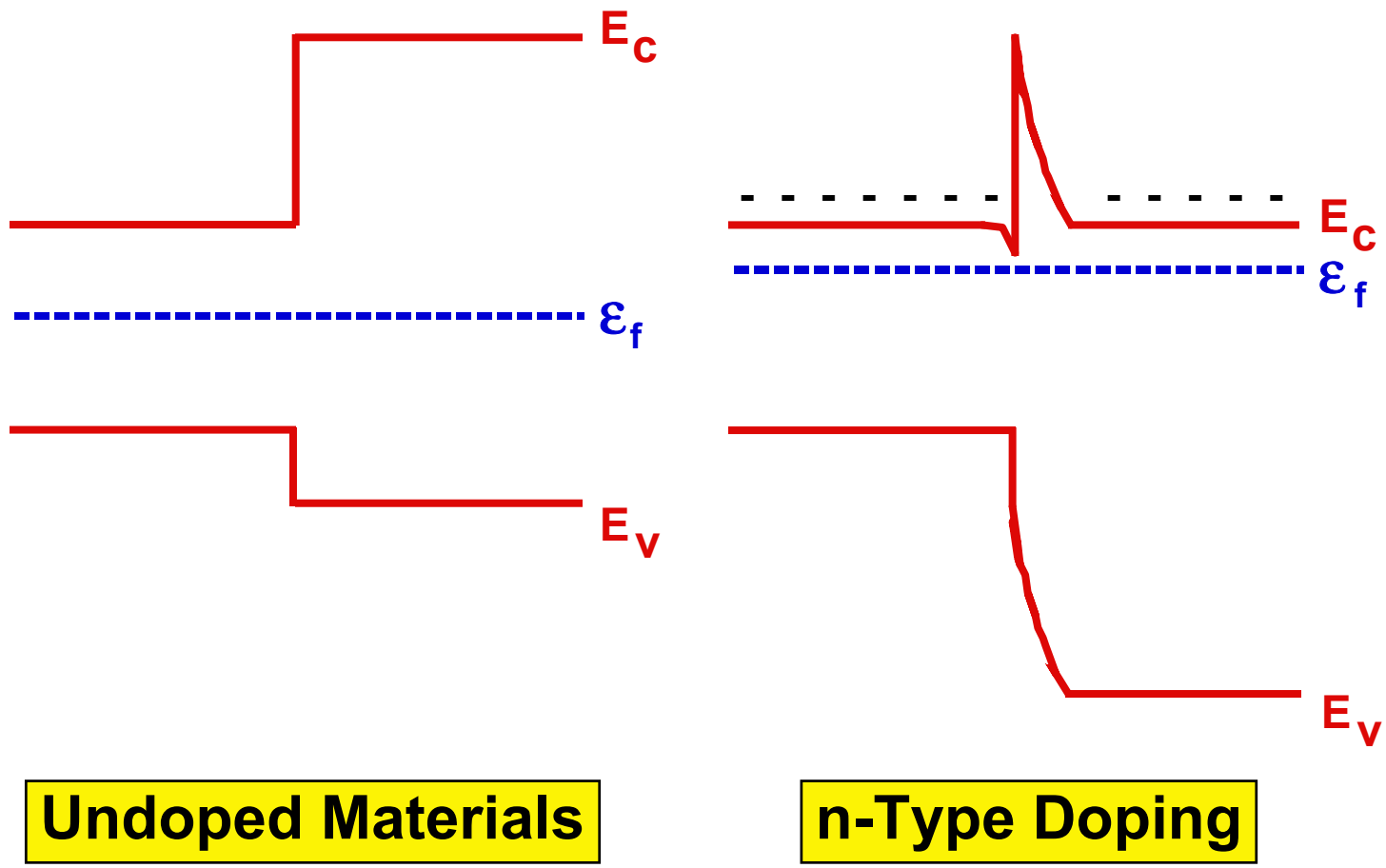

Heterojunction Band Offsets

Effect of Graded Layers and n-type Doping

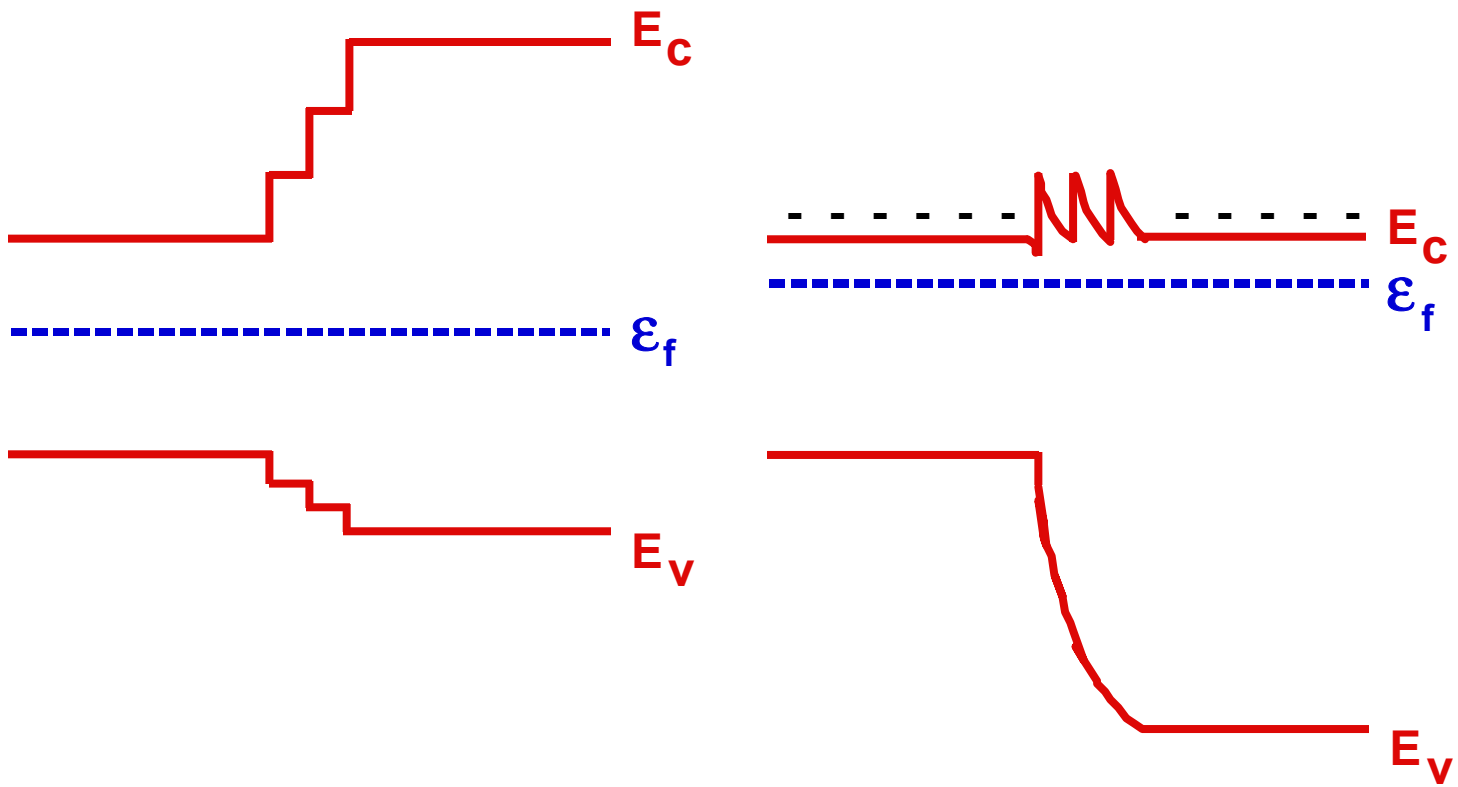

Undoped Materials **n-Type Doping**

Heterojunction Band Offsets

Continuously-Graded Layer and n-type Doping

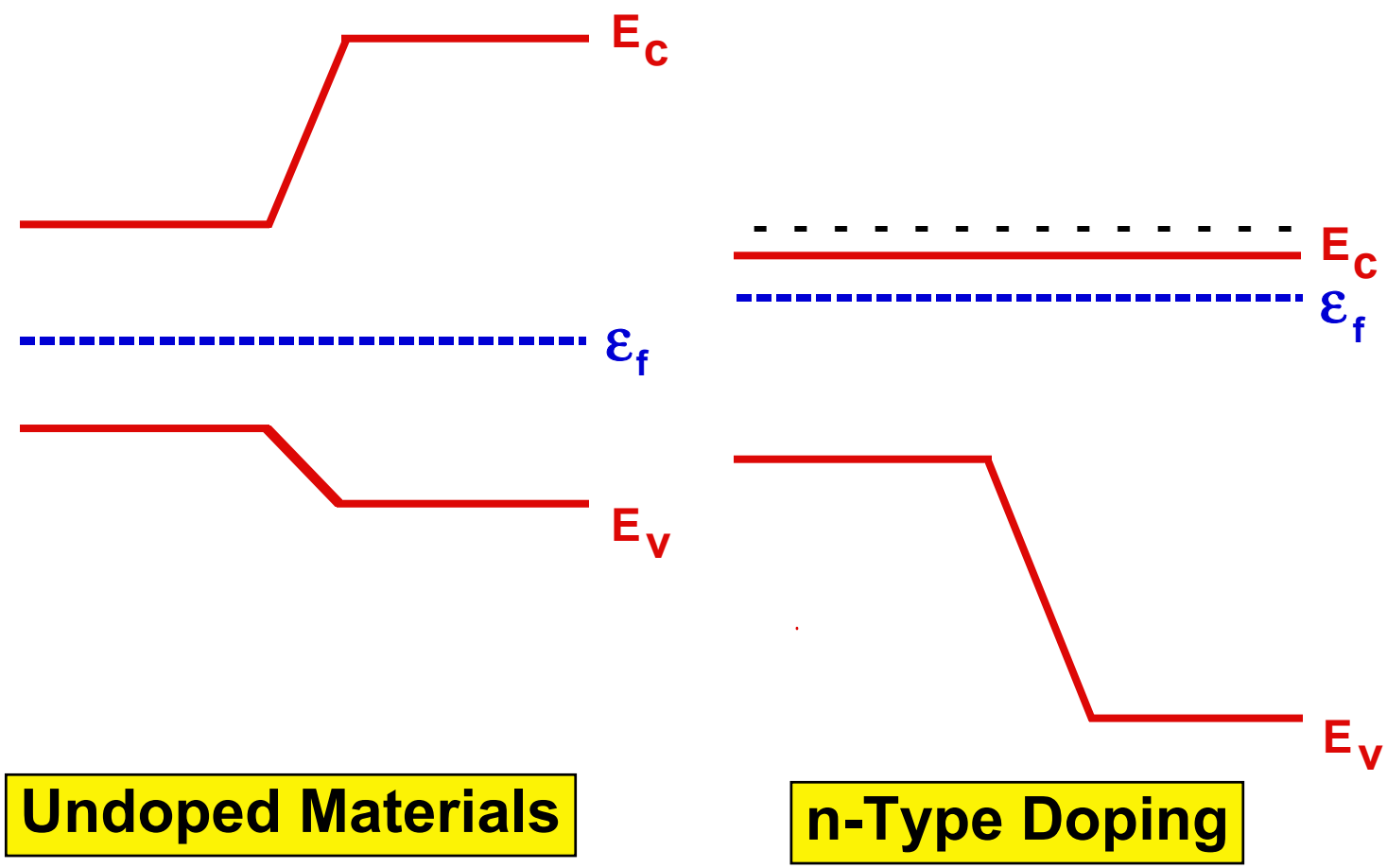

Visible-Blind Detector Structure

Through-the-Substrate Illumination; 300-365 nm Responsivity

84% Internal Quantum Efficiency Demonstrated

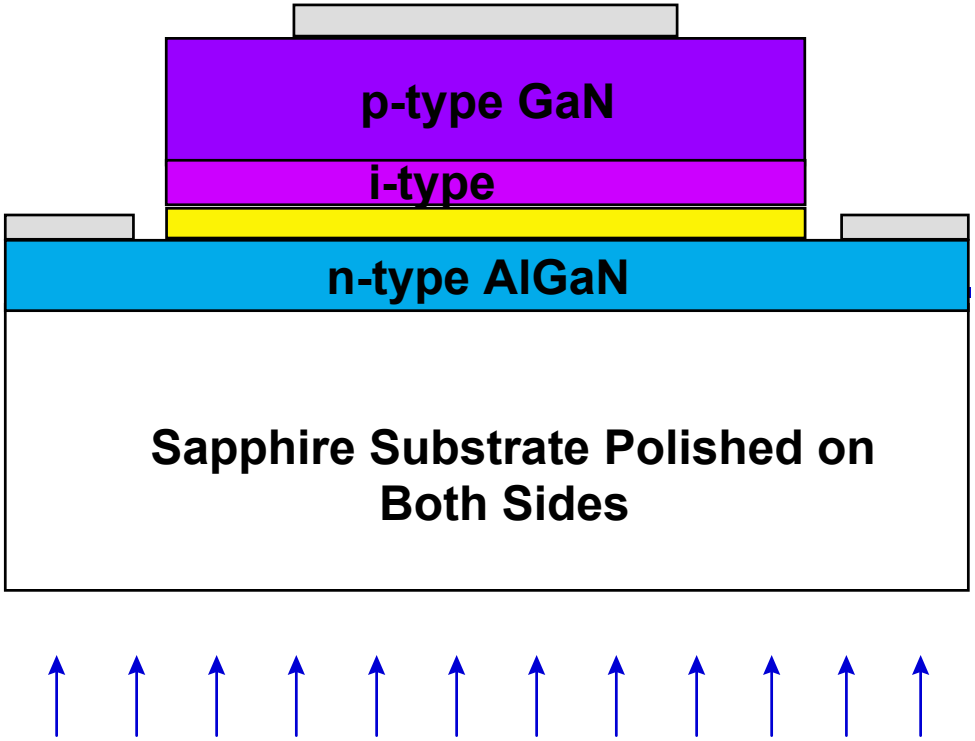

Designed for Through-the-Substrate Illumination

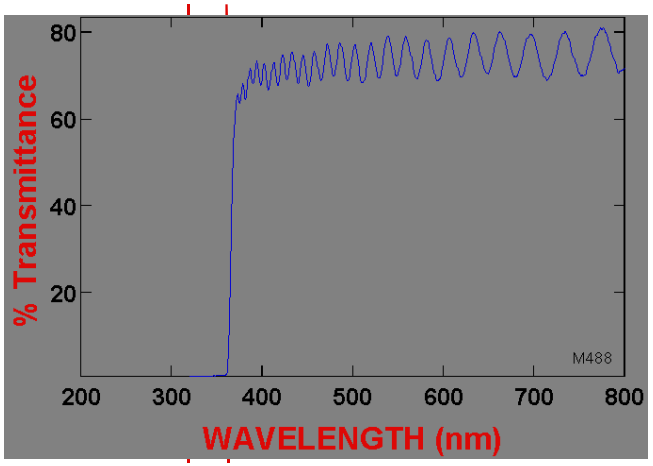

Diode Responsivity Wavelength Band (319 - 365 nm)

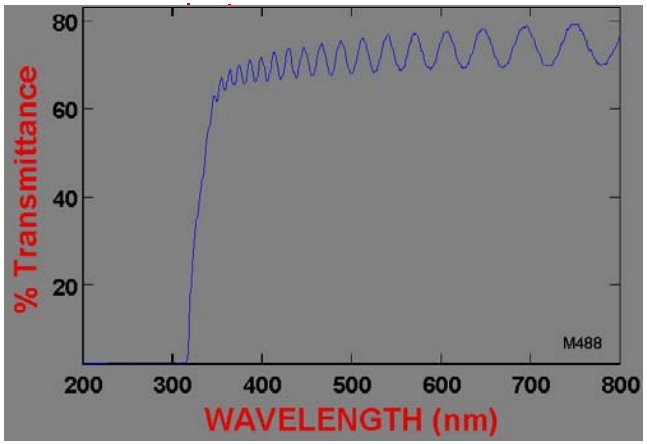

Solar-Blind Detector Structure

Through-the-Substrate Illumination; 250-280 nm Responsivity

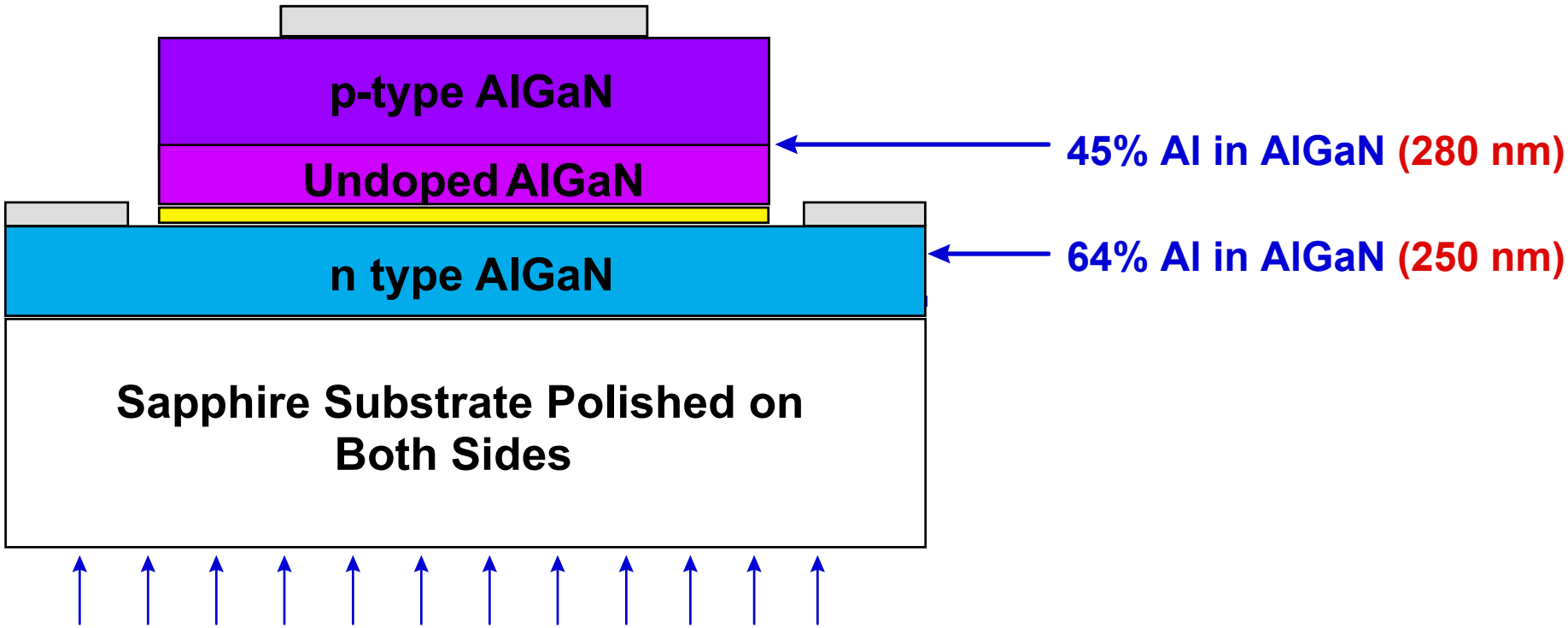

$$E_g(x) = E_g(GaN)\,(1-x) + E_g(AlN)\,x - b\,x\,(1-x)$$

$$= 3.41\,(1-x) + 6.20\,x - (1)\,x\,(1-x)$$

$$E_g(0.64) = 4.96 \text{ eV } (250 \text{ nm})$$

$$E_g(0.45) = 4.43 \text{ eV } (280 \text{ nm})$$

UV Photodiodes and Photodiode Arrays

Summary of Potential Applications

- Atmospheric Ozone Detection
- Development of Multicolor Imagers
- Flame Sensing and Monitoring
- Astrophotography

Nichia Chemical Nitride Laser Diode

10,000 hr Lifetime SCH-MQW Laser

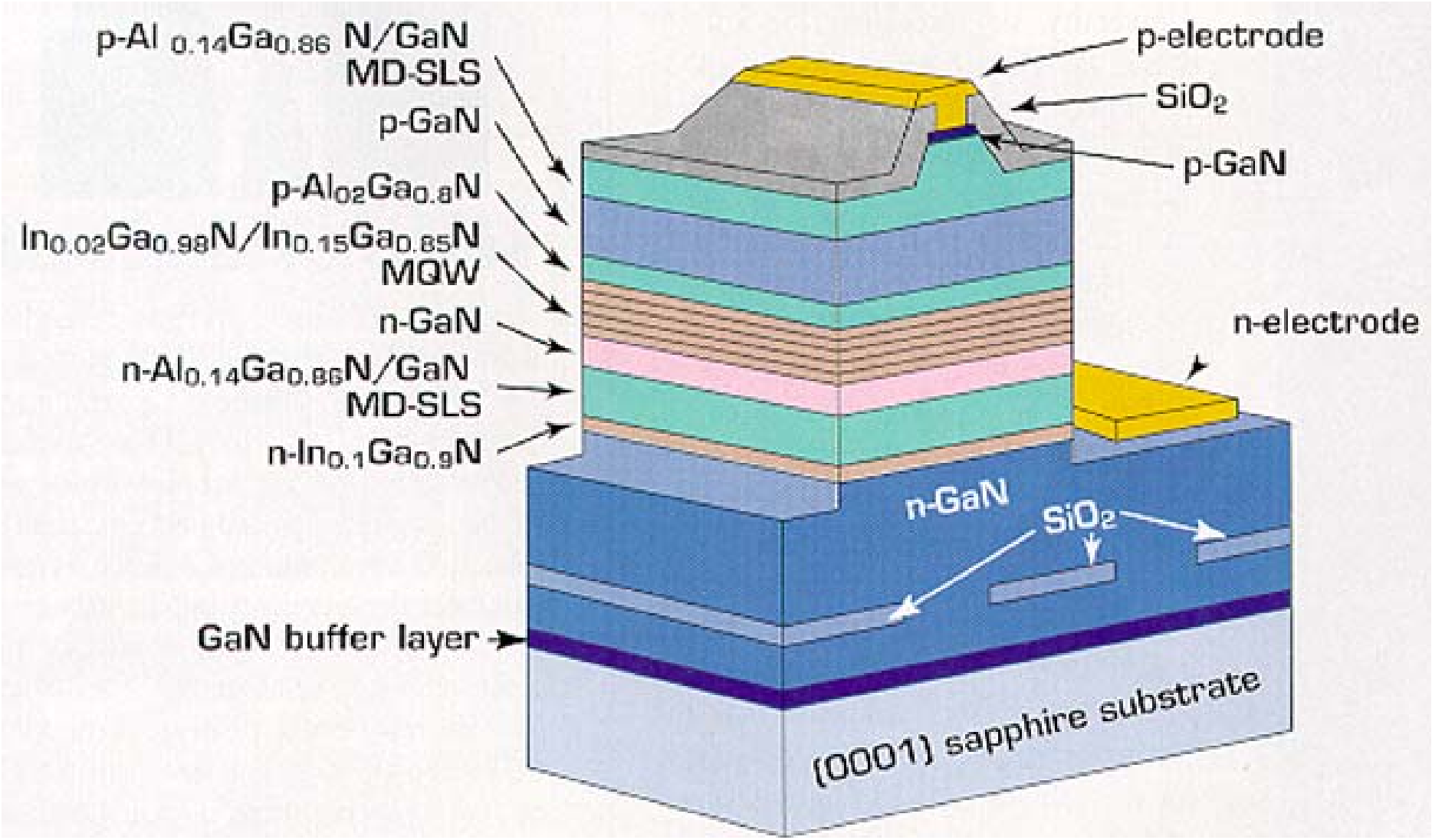

III-V Nitride MQW-SCH
280 nm UV Laser Diode Structure

Low Dislocation Density; High Performance Device

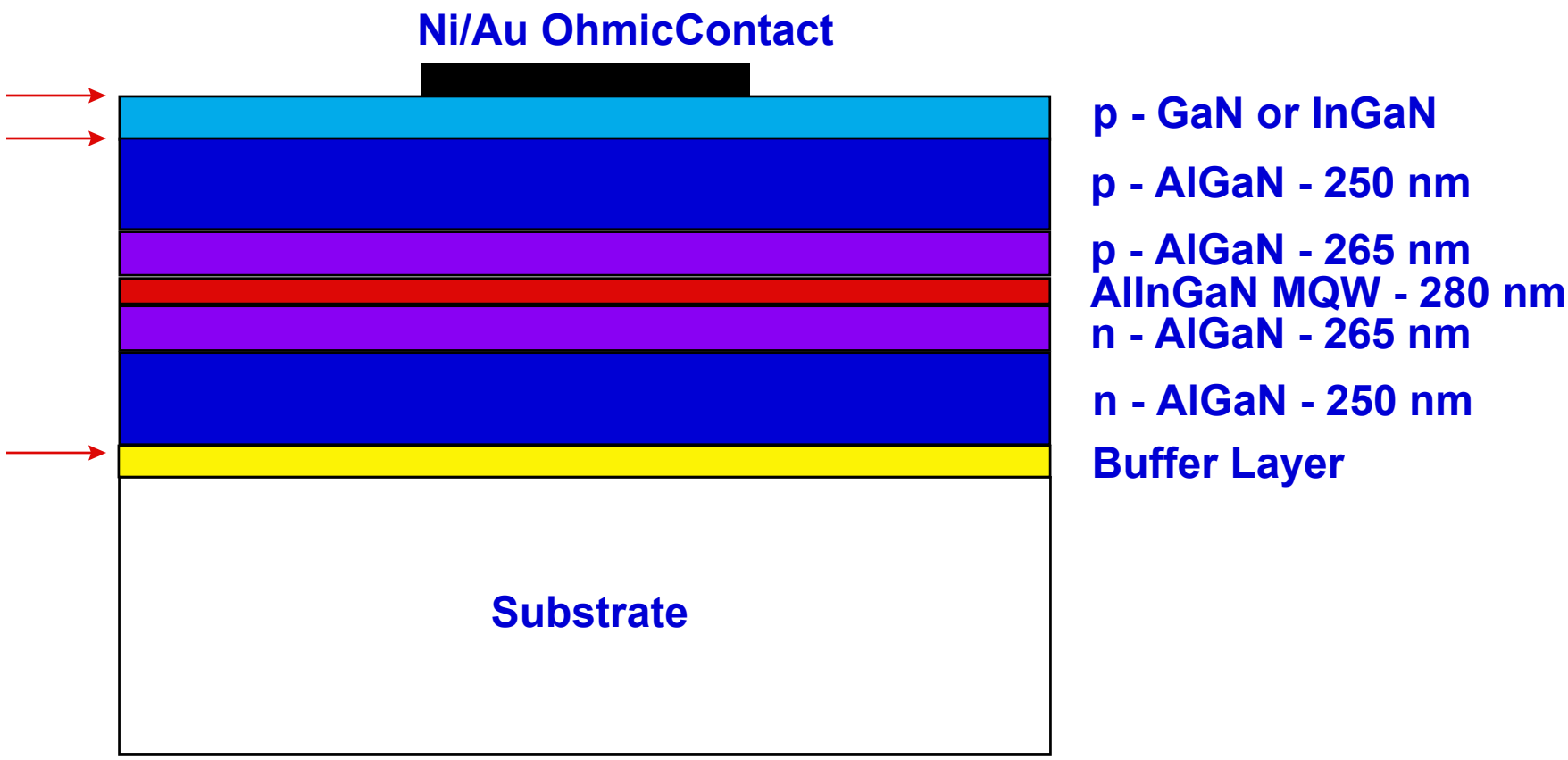

GaN p-on-n Diode

Band Lineups Using Gold Metallic Contact

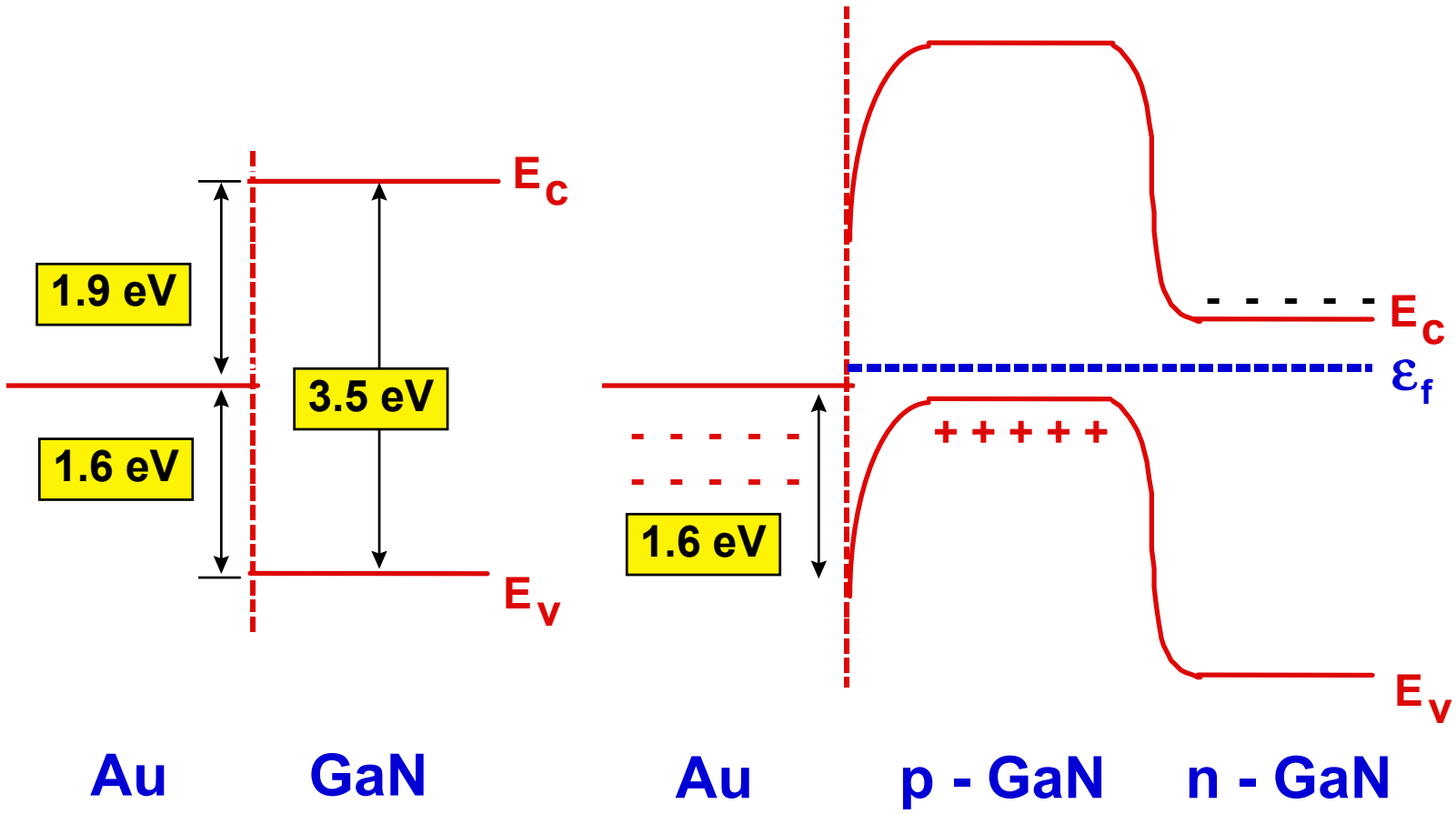

GaN p-on-n Diode

Band Lineups -- Forward Bias

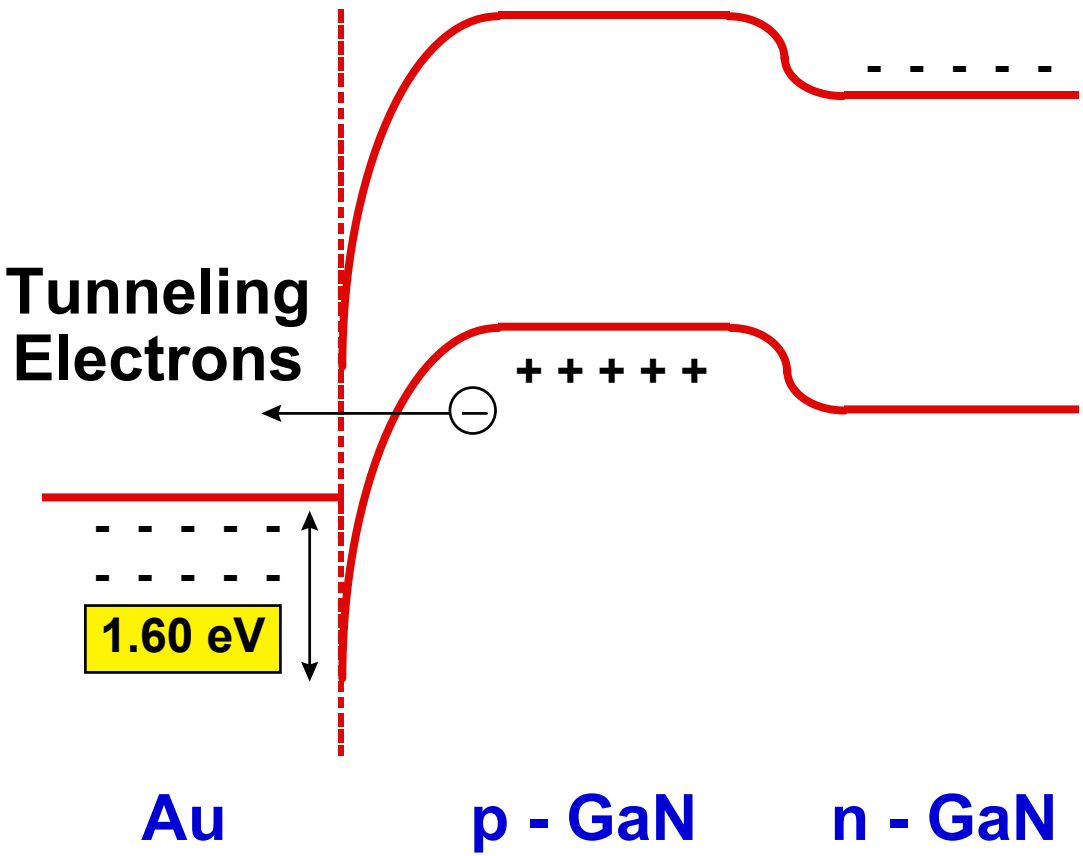

III-V Nitride MQW-SCH
280 nm UV Laser Diode Structure

Additional Internal Barriers

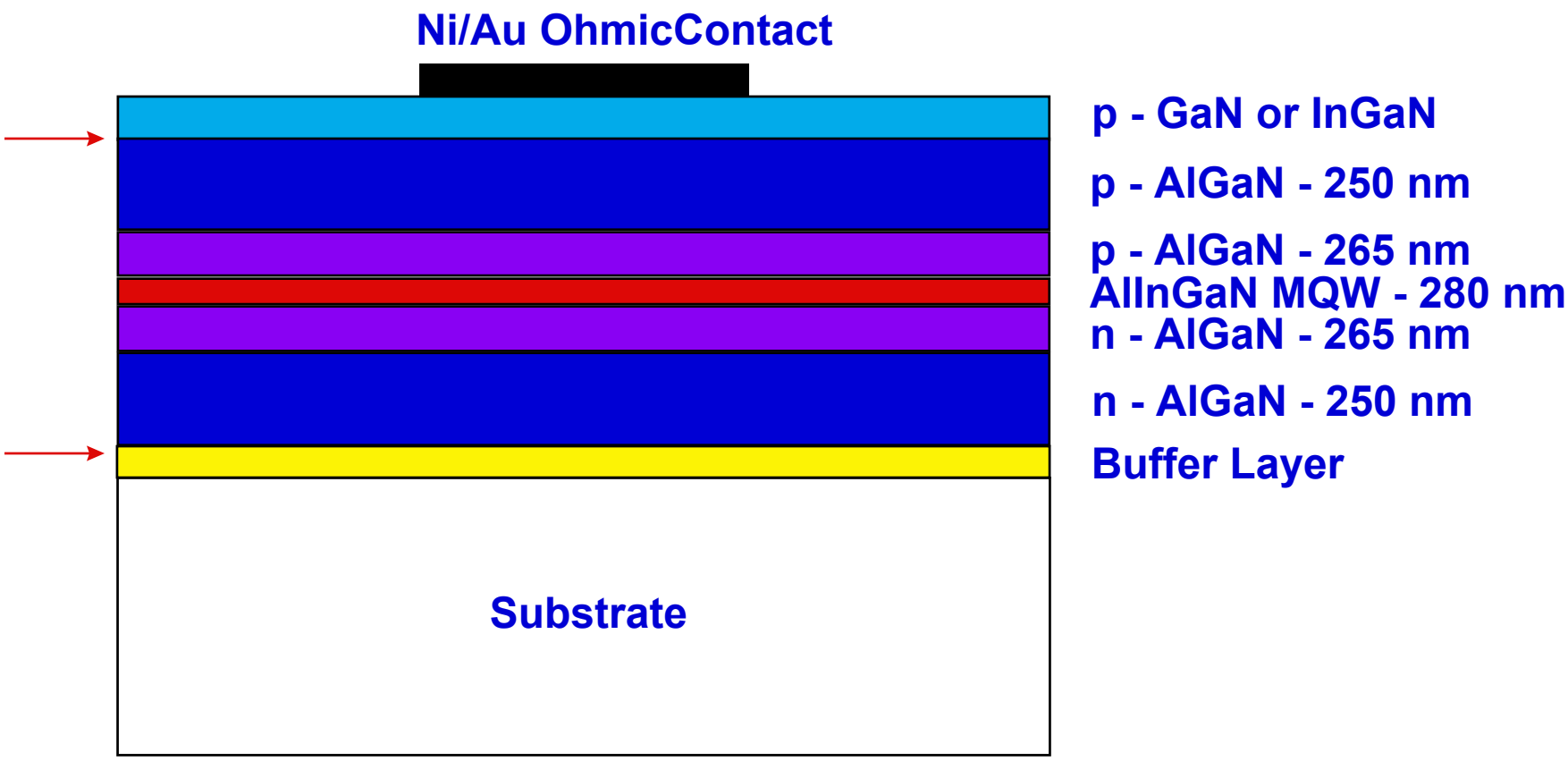

$Al_{0.65}Ga_{0.35}N/GaN$ Band Offsetds

Abrupt Interface Between $Al_{0.65}Ga_{0.35}N$ and GaN

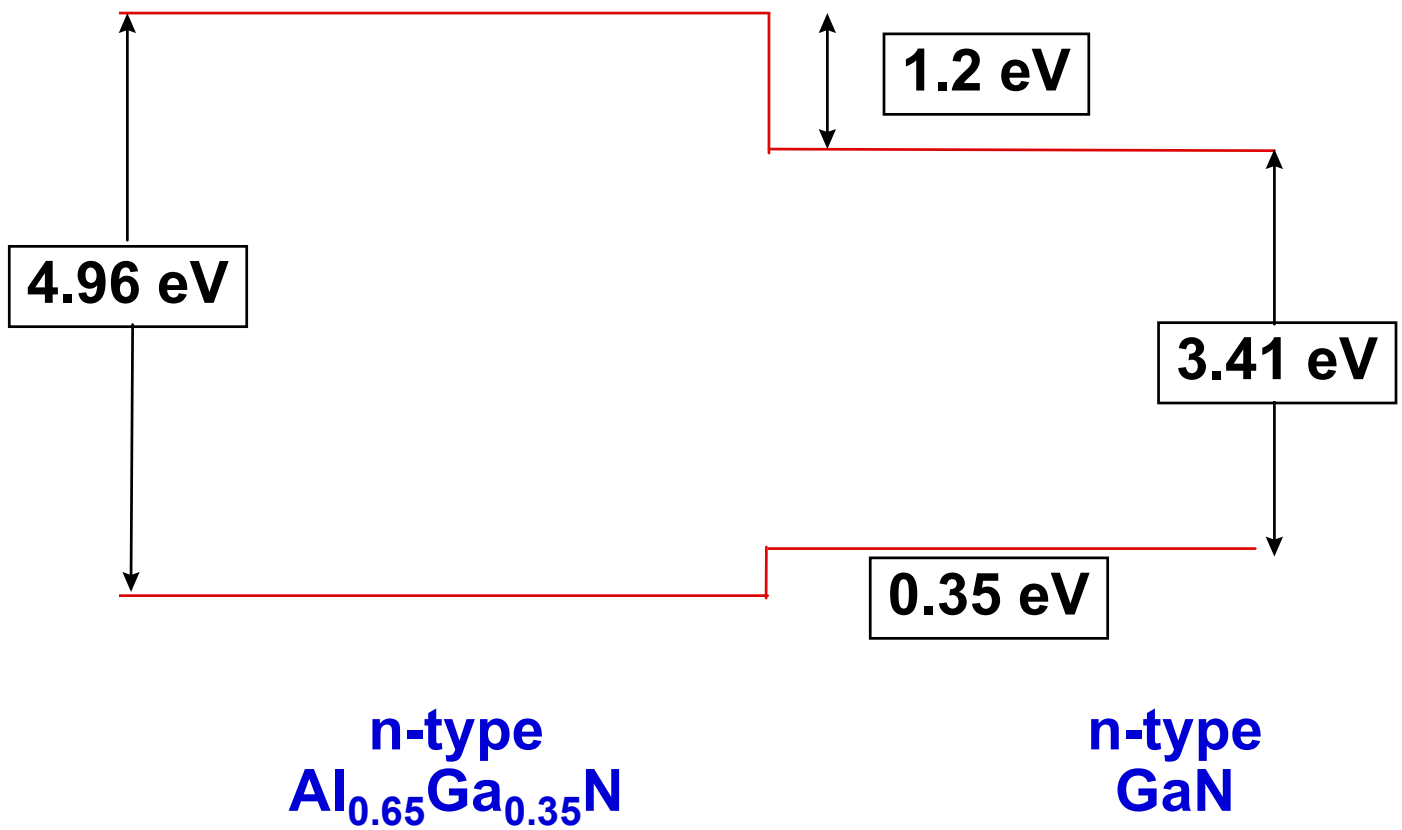

- 1.2 eV Conduction Band Offset Limits Electron Flow to the Left

$Al_{0.65}Ga_{0.35}N/GaN$ Heterointerface

Abrupt Interface Between n-type $Al_{0.65}Ga_{0.35}N$ and n-type GaN

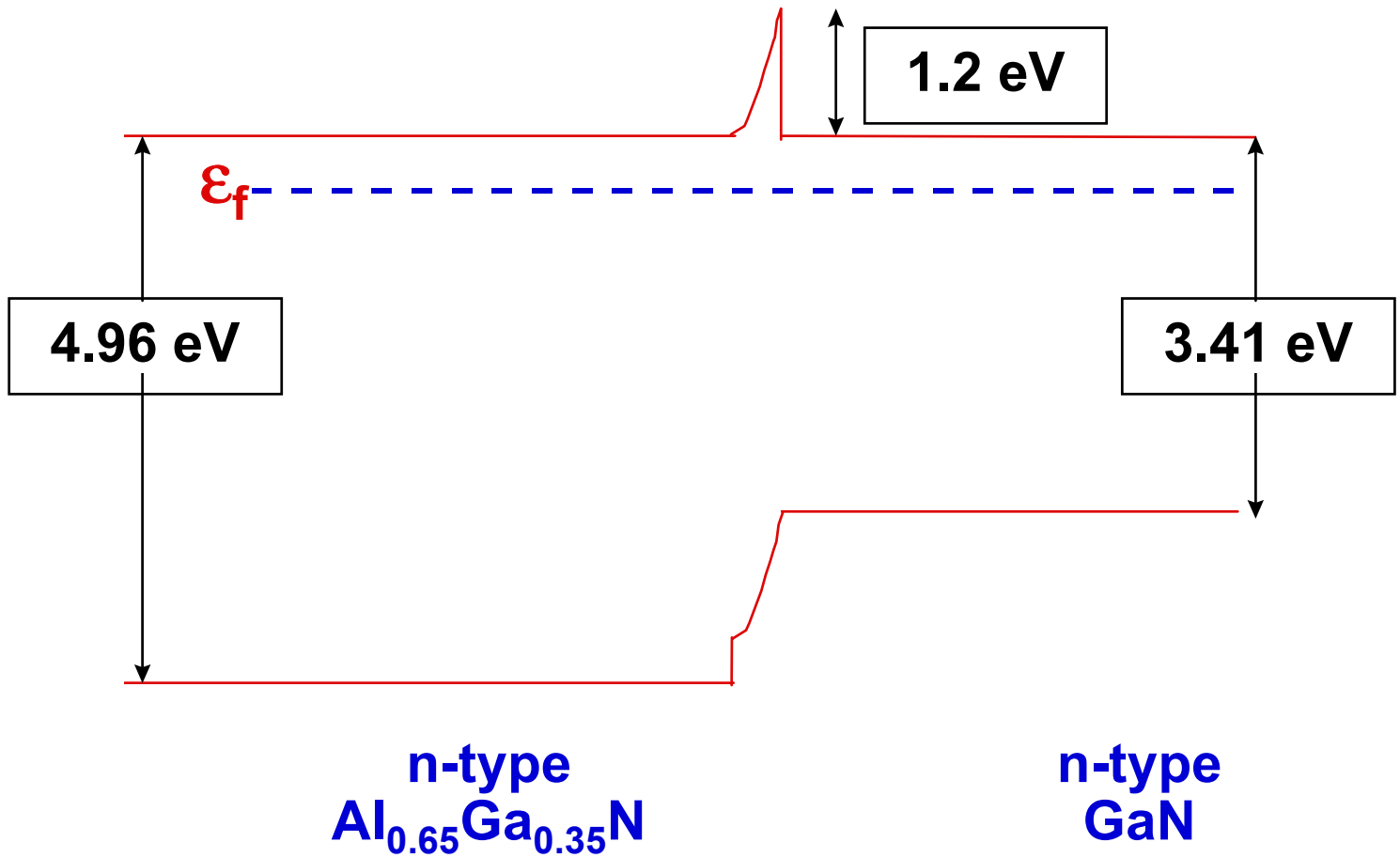

- 1.2 eV Spike Occurs in Conduction Band

Ohmic Contact for n-type $Al_{1-x}Ga_xN$

Linear Grading (y = x to 1) Between n-type $Al_{1-x}Ga_xN$ and n-type GaN

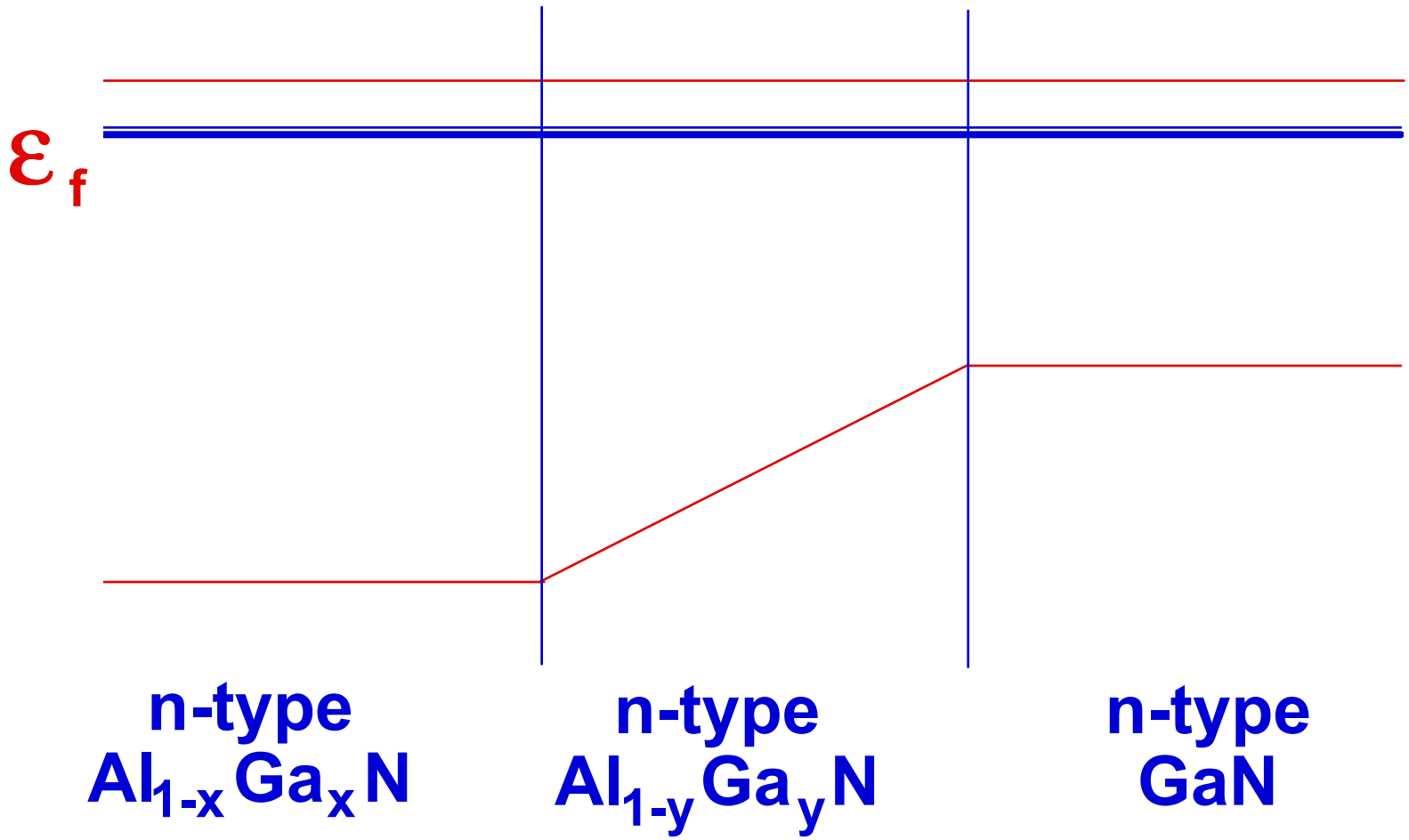

Ohmic Contact for n-type $Al_{1-x}Ga_xN$

Resonant Tunneling MQW Contact Between n-type $Al_{1-x}Ga_xN$ and n-type GaN

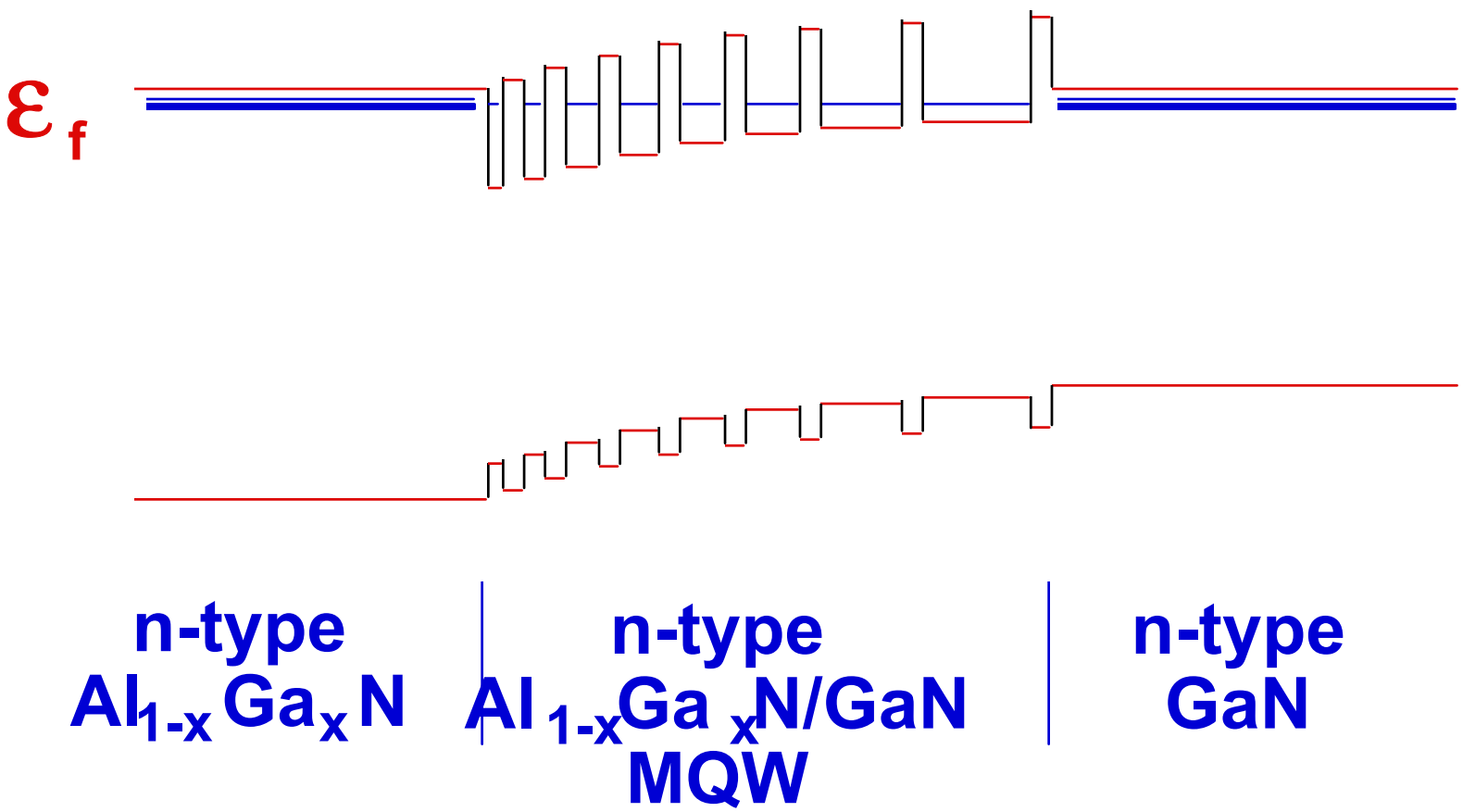

Ohmic Contact for p-type $Al_{1-x}Ga_xN$

Linear Grading (y = x to 1) Between p-Type $Al_{1-x}Ga_xN$ and p-type GaN

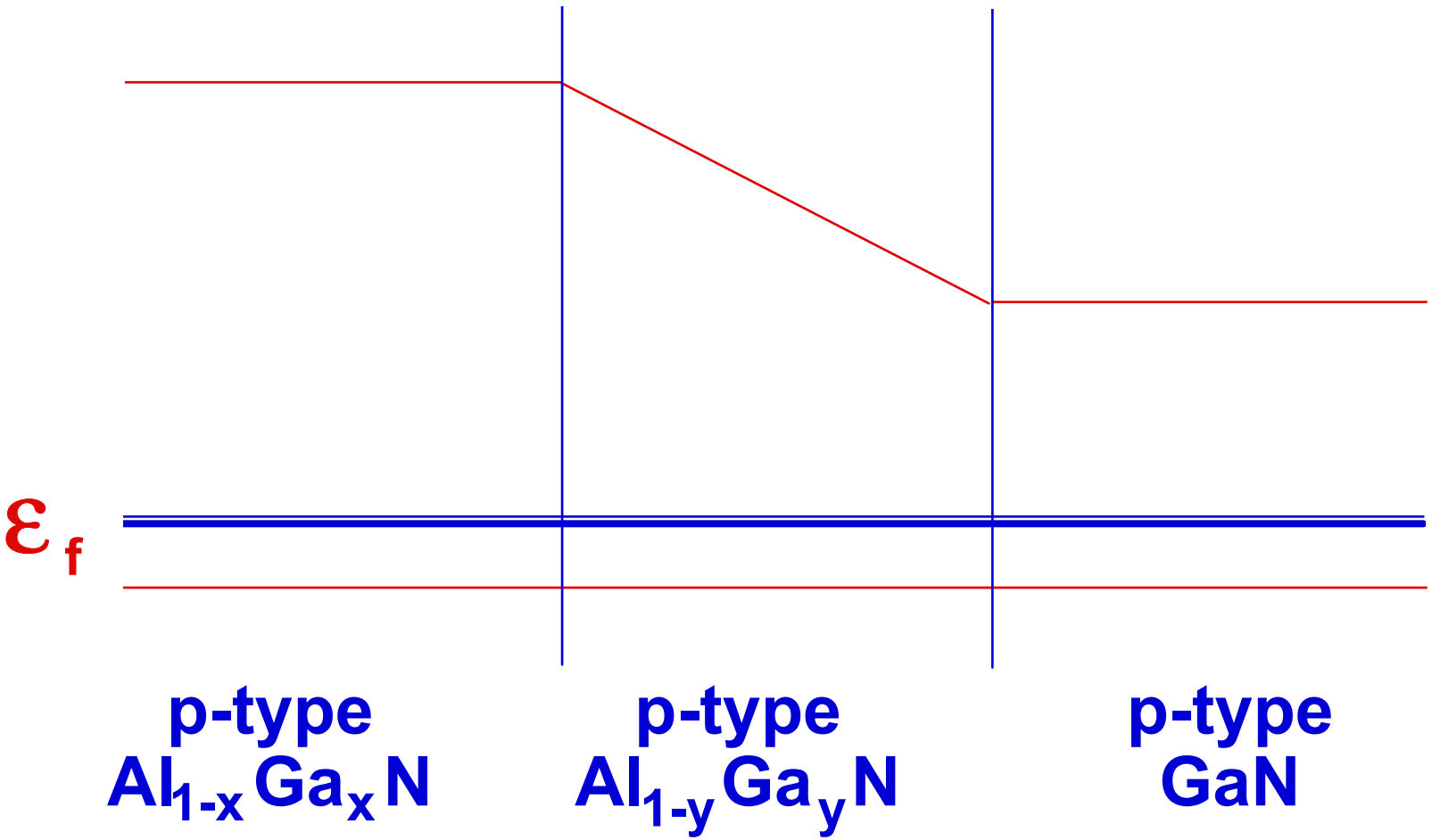

Ohmic Contact for p-type $Al_{1-x}Ga_xN$

Resonant Tunneling MQW ContactBetween p-type $Al_{1-x}Ga_xN$ and p-type GaN

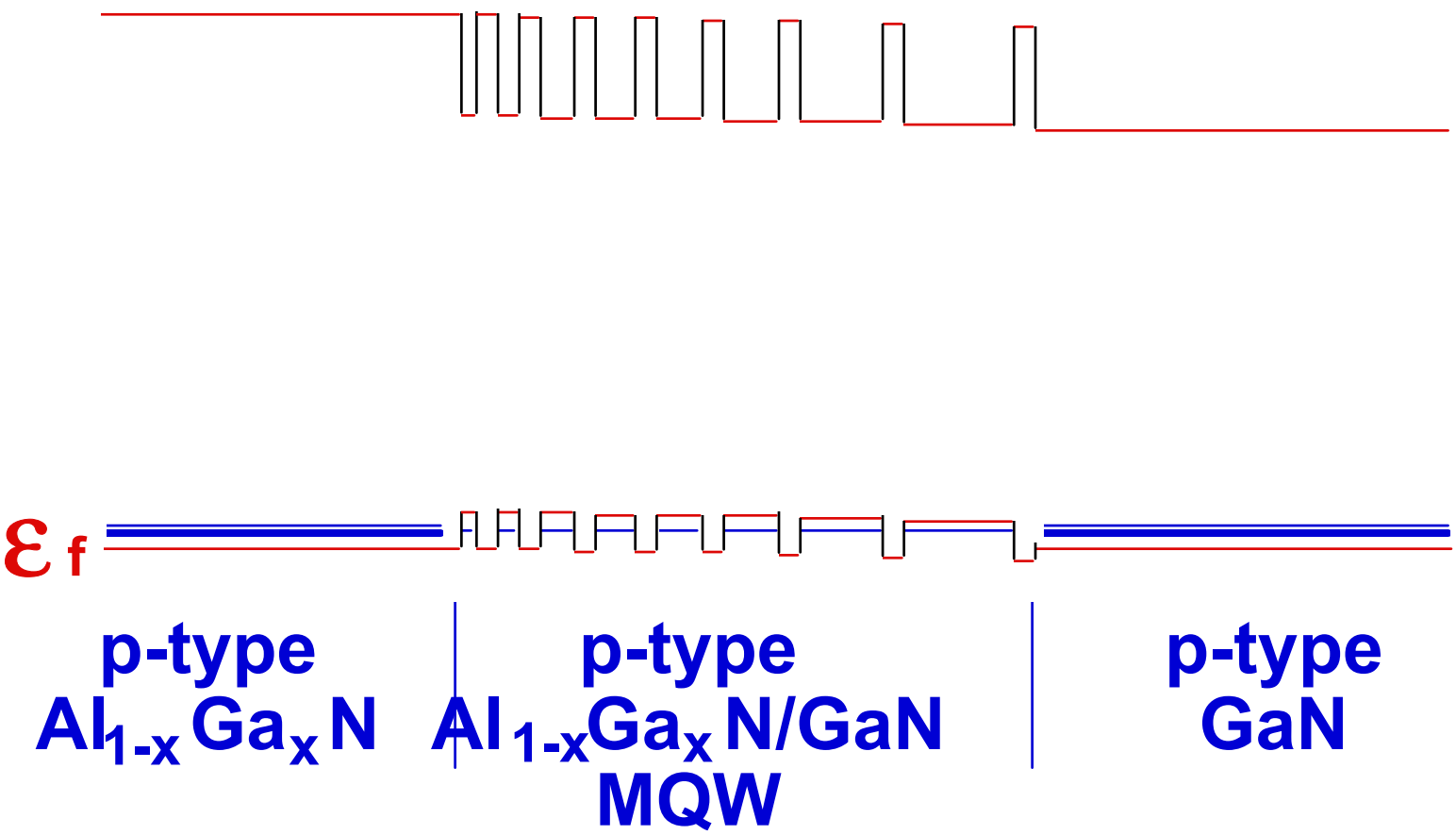

Nitride UV Laser Diode Structure

A p-on-n MQW-SCH Structure on Sapphire Substrate

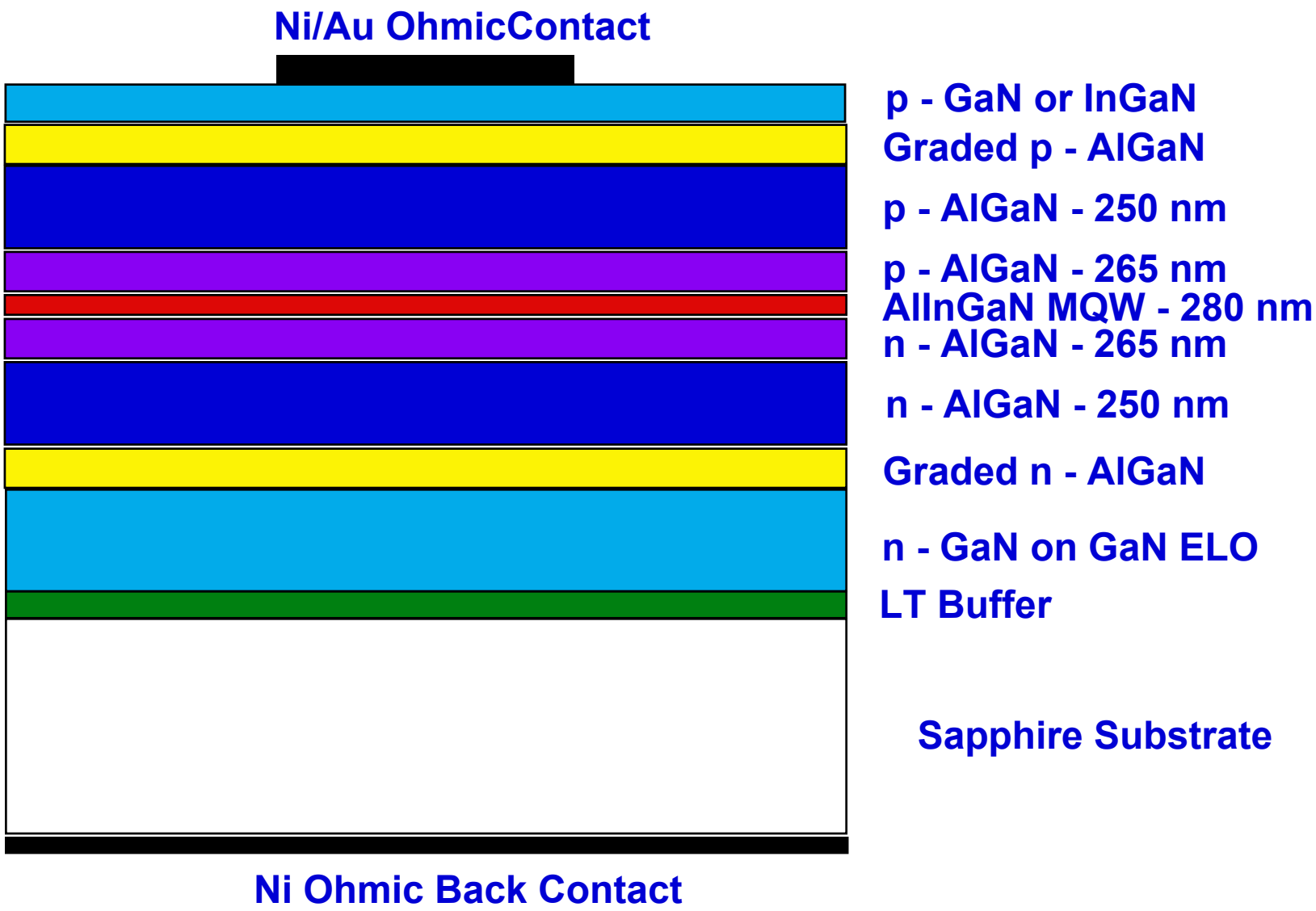

III-V Nitride MQW-SCH UV Laser Diode Structure

Vertical Device Structure; Cleavable Substrate

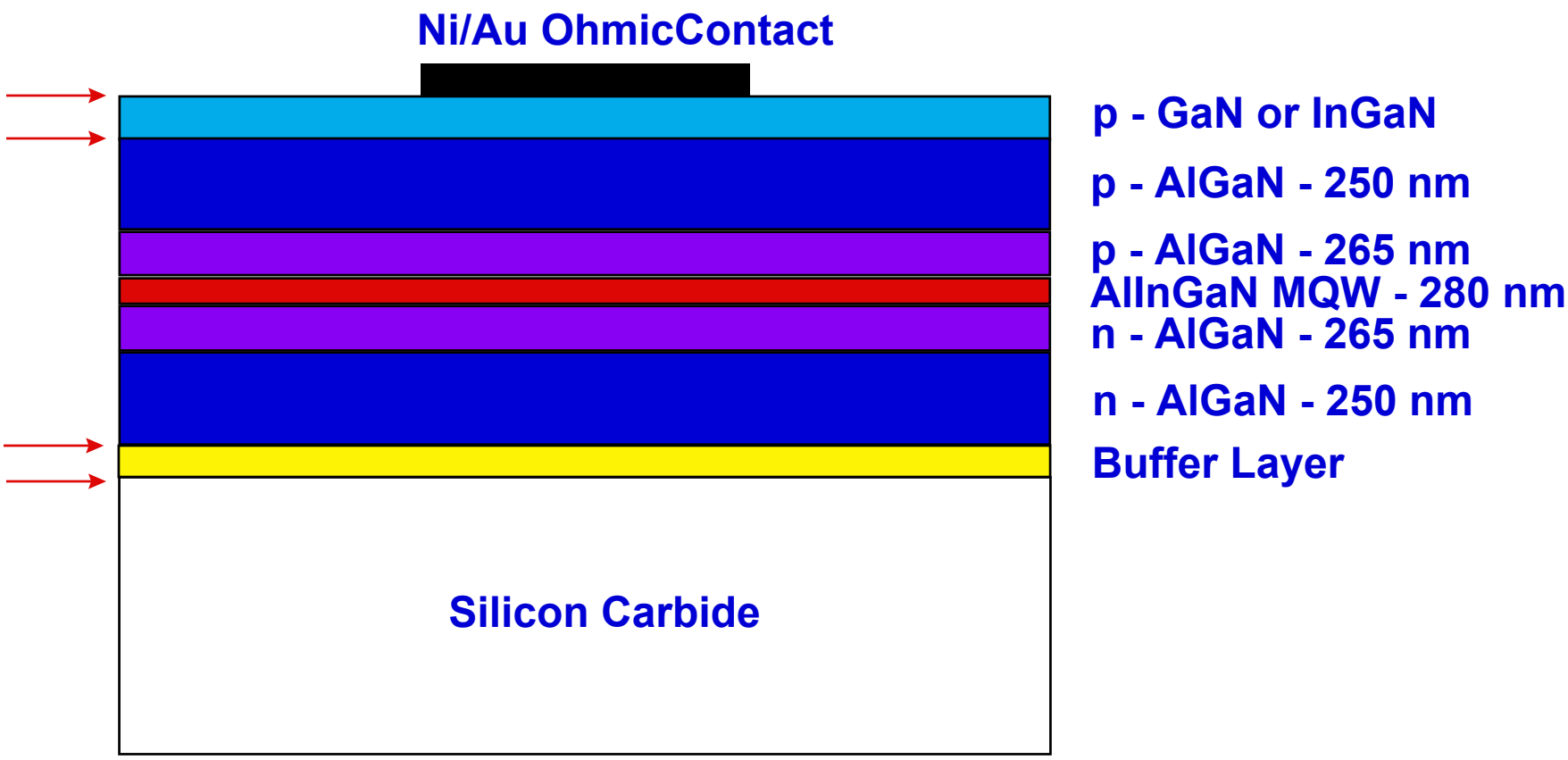

$Al_{0.5}Ga_{0.5}N$ p-on-n Diode

Band Lineups Using n-type SiC Substrate

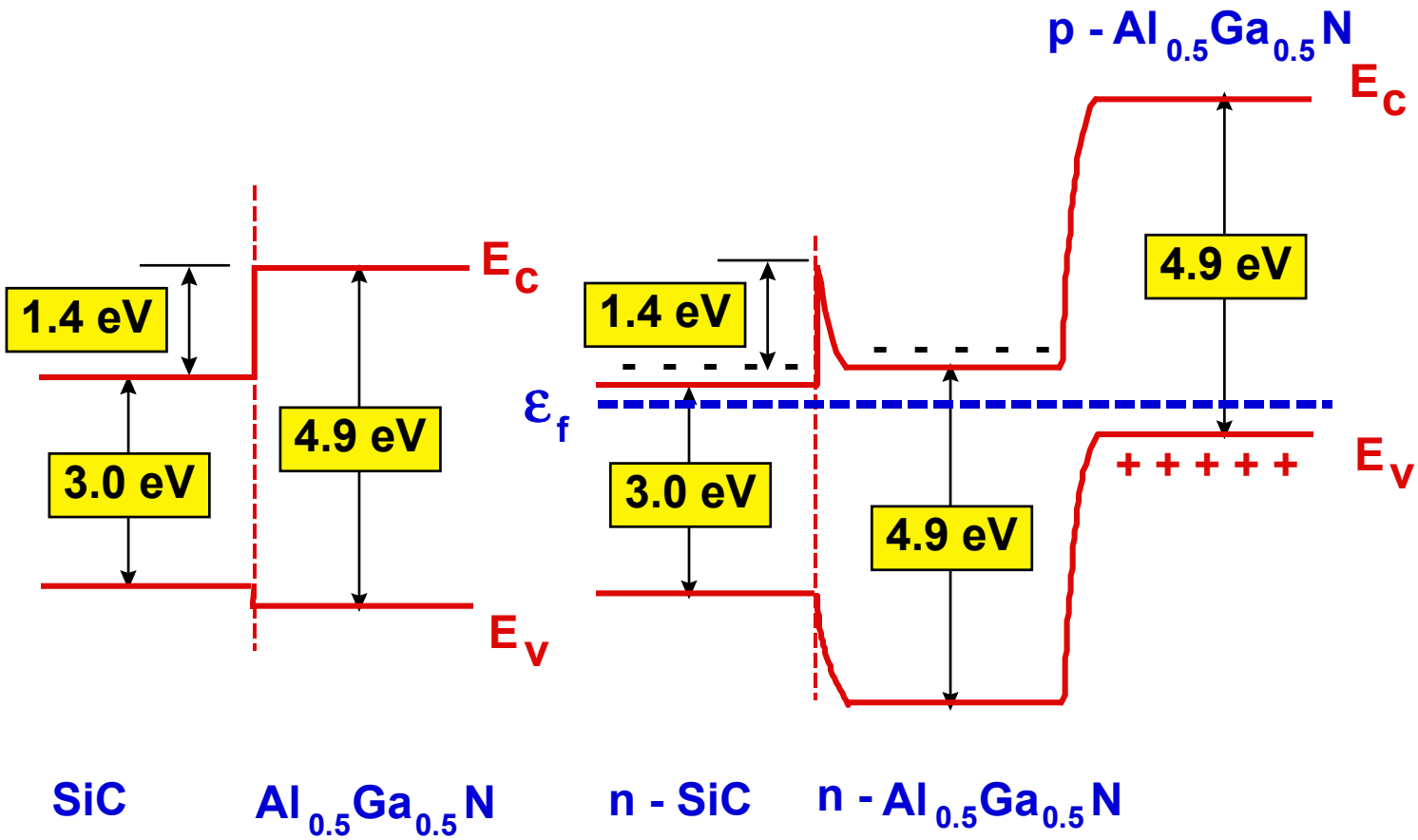

III-V Nitride MQW-SCH UV Laser Diode Structure

Vertical Device Structure; Cleavable Substrate

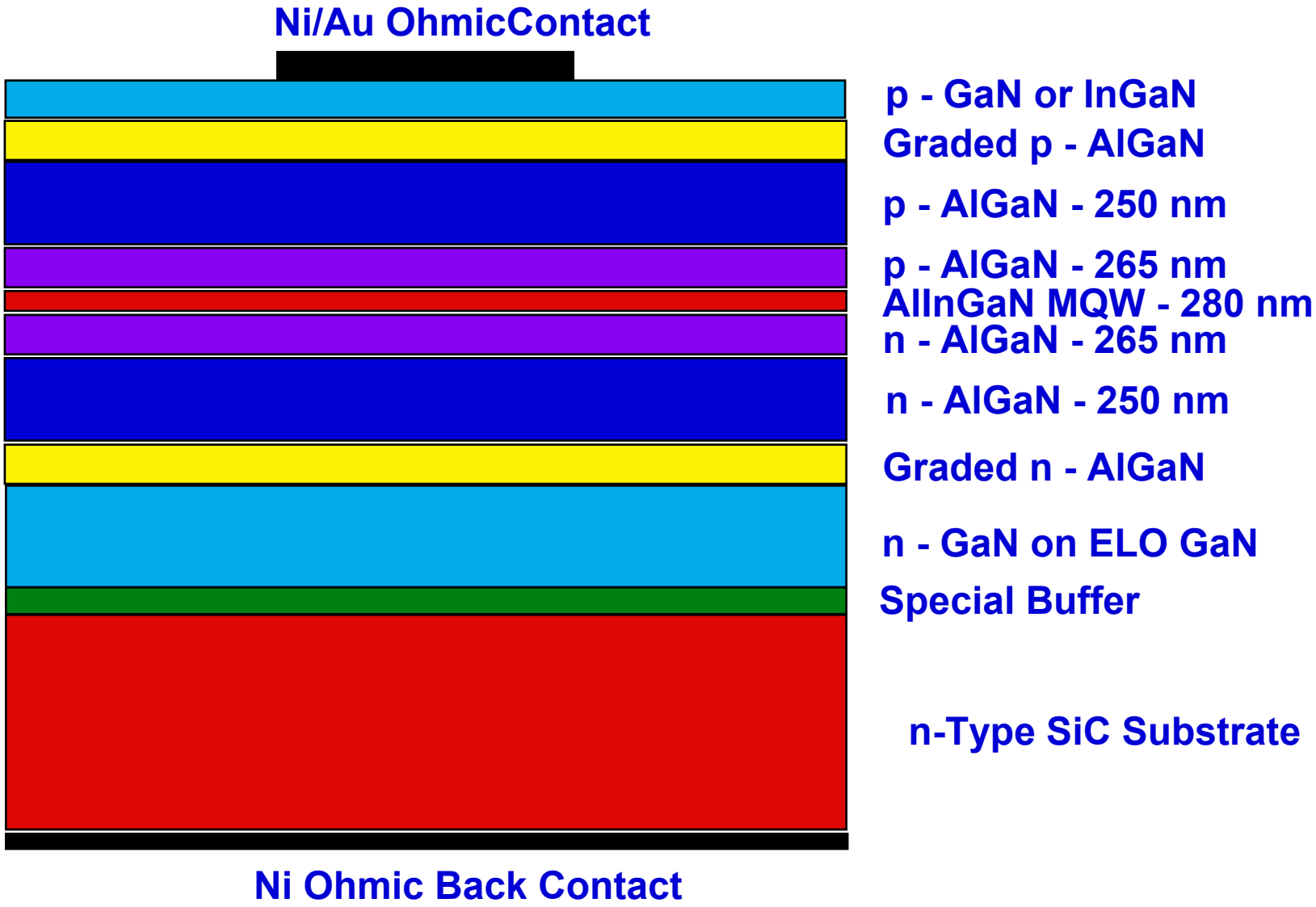

III-V Nitride MQW-SCH UV Laser Diode Structure

Substrate: Gallium Nitride

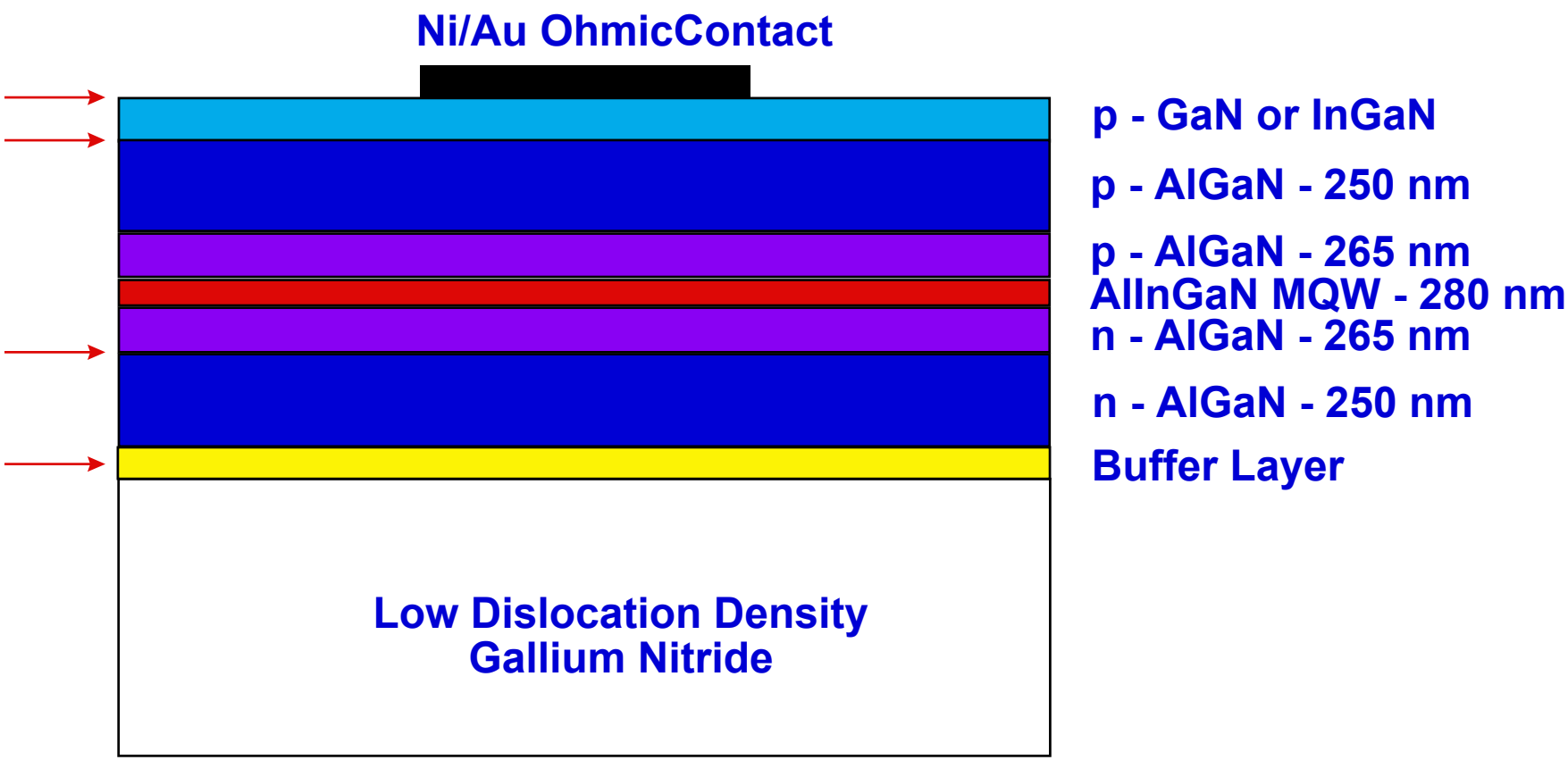

III-V Nitride MQW-SCH UV Laser Diode Structure

Vertical Device Structure; Cleavable Substrate

Ni/Au OhmicContact

p - GaN or InGaN

Graded p - AlGaN

p - AlGaN - 250 nm

p - AlGaN - 265 nm

AlInGaN MQW - 280 nm

n - AlGaN - 265 nm

n - AlGaN - 250 nm

Graded n - AlGaN

n - GaN or InGaN

n-Type GaN Substrate

Ti/Al Ohmic Back Contact

Development of III-V Nitride UV Light Emitters

Key Issues

- Improved p-Type Subtitutional Doping
- Dislocation Reduction
- Strain Limits
- Suitable Laser/LED Structures -- Band Offsets
- Preparation of Cavities & End Mirrors (Lasers)
- Device Processing
- Ohmic Contacts.